NVJ
HORIZONTAL, CENTRIFUGAL, VOLUTE-TYPE PUMPS

ISH PUMPS OLOMOUC

APPLICATION

- primary and secondary water stations
- booster stations to increase the pressure in the water systems
- water supply systems in a wide range of industrial branches
- for pumping in the heating plants
- agriculture as pumping stations for large-area irrigation systems

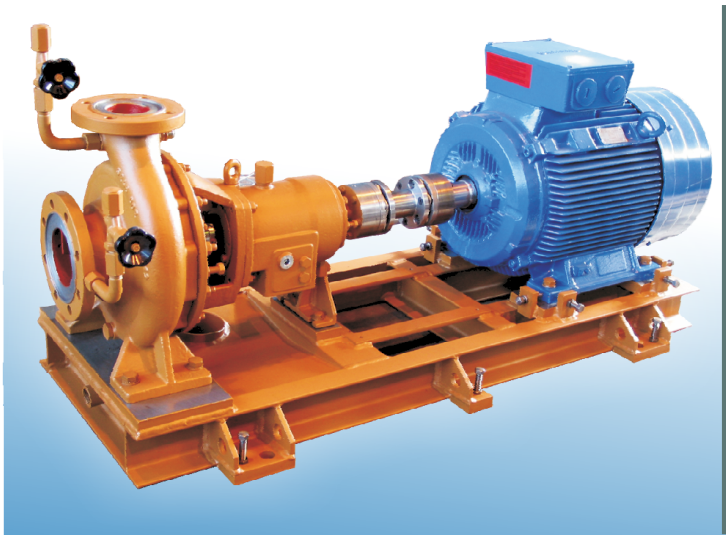

WORKING CONDITIONS

- drinking or utility water
- medium temperature up to +120°C
- working pressure up to 16 bars
- pH 6 - 11

TYPE IDENTIFICATION

100- NVJ - 250-26-DY-120-09

- 09 — motor type
- 120 — pump number
- DY — material specification
- 26 — impeller outlet channel width
- 250 — impeller nominal diameter
- NVJ — pump type (NVJ)
- 100 — nominal diameter of discharge pipe

WORKING AREA

PUMP SIZE	SHAFT SPEED (r.p.m.)	FLOW Q (l/s)	DELIVERY HEAD H (m)	TEMPERATURE MAX. (°C)
from 32-NVJ-125 to 500-NVJ-800	990 2950	from 0,5 to 1400	from 5 to 135	120

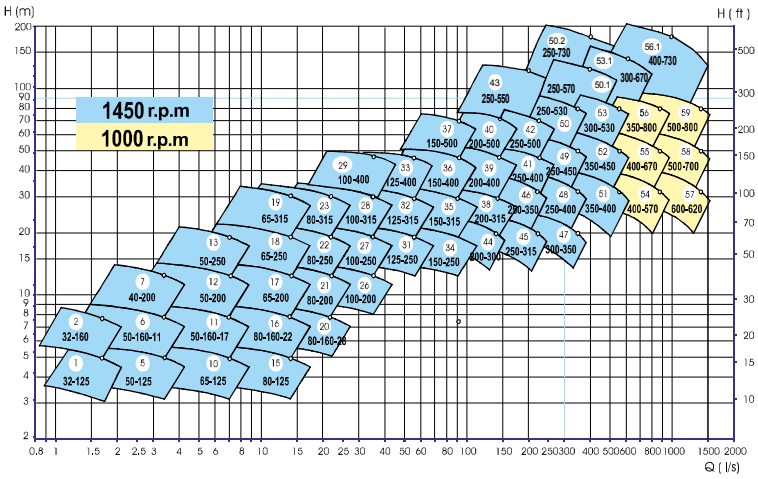

CONSTRUCTION

- dimensions and parameters acc. to ČSN EN 22858/ISO 2858/DIN 24 256 for sizes up to 36 (150-NVJ-400)
- full compliance with ČSN ISO 5199 requirements
- full compliance with API Standard 610, 11. edition
- flanges PN16
  - acc. to ČSN EN 1092-1/ISO 7005-1
  - acc. to ČSN EN 1092-2/ISO 7005-2
  - acc. to ANSI B16.1 or ASME B16.5 upon request

MATERIAL SPECIFICATION

Part name	LY	DY
volute	EN-GJS-400	1.0619
pump casing	EN-GJS-400	1.0619
impeller	1.4308	1.4308
seal rings	CuSn10Zn2	CuSn10Zn2
shaft	1.0503	1.0503
impeller nut	1.0503	1.0503
bearing body	1.0619	1.0619
base plate	1.0570	1.0570

The above table states the basic material specifications: if applicable, other material combinations optional depending on pumped medium.

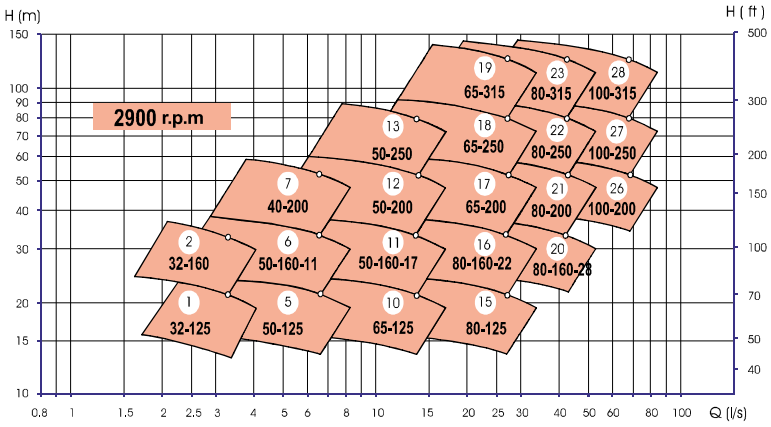

ISH PUMPS OLOMOUC

NVJ
HORIZONTAL, CENTRIFUGAL, VOLUTE-TYPE PUMPS

NVJ

BASIC DIMENSIONS

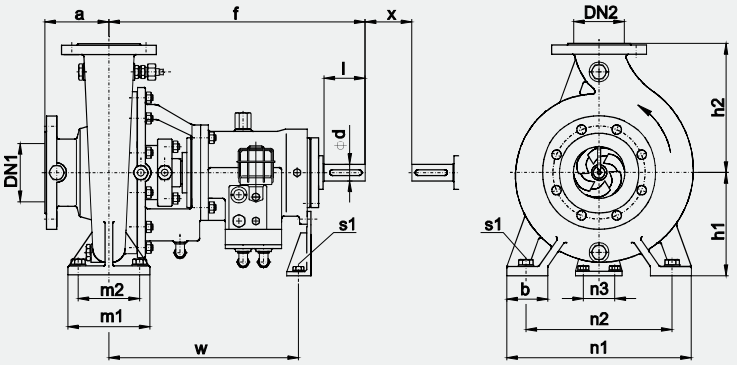

CROSS-SECTION DRAWING

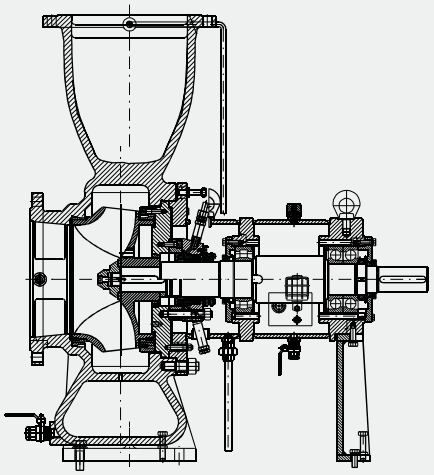

Pos.	DN1	DN2	Ø im-peller	Pump a	f	h1	h2	Feet b	m1	m2	n1	n2	n3	s1	s2	w	Shaft d	l	x	(kg)
1	50	32	125	80	385	112	140	50	100	70	190	140	110	M12	M12	285	24	50	100	55
2	50	32	160	80	385	132	160	50	100	70	240	190	110	M12	M12	285	24	50	100	60
5	65	50	125	80	385	112	140	50	100	70	210	160	110	M12	M12	285	24	50	100	68
6	65	50	160	80	385	132	160	50	100	70	240	190	110	M12	M12	285	24	50	100	75
7	65	40	200	100	385	160	180	50	100	70	265	212	110	M12	M12	285	24	50	100	75
10	80	65	125	100	385	132	160	50	100	70	240	190	110	M12	M12	285	24	50	100	75
11	80	50	160	100	385	160	180	50	100	70	265	212	110	M12	M12	285	24	50	100	76
12	80	50	200	100	385	160	200	50	100	70	265	212	110	M12	M12	285	24	50	100	80
13	80	50	250	125	500	180	225	65	125	95	320	250	110	M12	M12	370	32	80	100	82
15	100	80	125	100	385	160	180	65	125	95	280	212	110	M12	M12	285	24	50	100	68
16	100	80	160	100	500	160	200	65	125	95	280	212	110	M12	M12	370	32	80	100	82
17	100	65	200	100	500	180	225	65	125	95	320	250	110	M12	M12	370	32	80	140	85
18	100	65	250	125	500	200	250	80	160	120	360	280	110	M16	M12	370	32	80	140	100
19	100	65	315	125	530	225	280	80	160	120	400	315	110	M16	M12	370	42	110	140	240
20	125	80	160	125	500	180	225	65	125	95	320	250	110	M12	M12	370	32	80	140	98
21	125	80	200	125	500	180	250	65	125	95	345	280	110	M12	M12	370	32	80	140	108
22	125	80	250	125	500	225	280	80	160	120	400	315	110	M16	M12	370	32	80	140	120
23	125	80	315	125	530	250	315	80	160	120	400	315	110	M16	M12	370	42	110	140	240
26	125	100	200	125	500	200	280	80	160	120	360	280	110	M16	M12	370	32	80	140	90
27	125	100	250	140	530	225	280	80	160	120	400	315	110	M16	M12	370	42	110	140	210
28	125	100	315	140	530	250	315	80	160	120	400	315	110	M16	M12	370	42	110	140	230
31	150	125	250	140	530	250	355	80	160	120	400	315	110	M16	M12	370	42	110	140	220
32	150	125	315	140	530	280	355	100	200	150	500	400	110	M20	M12	370	42	110	140	240
33	150	125	400	140	530	315	400	100	200	150	500	400	110	M20	M12	370	42	110	140	280
34	200	150	250	160	530	280	375	100	200	150	500	400	110	M20	M12	370	42	110	180	240
35	200	150	315	160	670	315	400	100	200	150	550	450	140	M20	M16	500	48	110	180	380
36	200	150	400	160	670	315	450	100	200	150	550	450	140	M20	M16	500	48	110	180	425
37	200	150	500	180	670	375	500	100	200	150	550	450	140	M20	M16	500	48	110	180	430
38	250	200	315	200	670	355	450	100	200	150	550	450	140	M20	M16	500	48	110	180	420
39	250	200	400	200	670	355	500	100	200	150	550	450	140	M20	M16	500	48	110	180	425
40	250	200	500	200	770	425	560	100	200	150	660	560	140	M20	M16	565	60	140	180	495
41	300	250	400	200	770	425	600	130	260	190	800	670	140	M24	M16	565	60	140	180	440
42	300	250	500	200	770	475	670	130	260	190	800	670	140	M24	M16	565	60	140	180	540

Dimensions for sizes 43 - 61 upon request.

SEAL DESIGN

- the shaft leakage prevented using a packing
  - auxiliary piping in compliance with API Standard 610, 11. edition
- seal options:
  - single mechanical seal, cartridge type
  - double mechanical seal, cartridge type

MOTORS

- foot-mounted electric motor drive
- diesel engine drive
- driving force transmitted using a flexible coupling
  - flexible coupling with a spacer
  - flexible coupling with a spacer acc. to API Standard 671
- common subframe assembly

DPO 05-123-1206/A

ISH PUMPS OLOMOUC
ISH PUMPS OLOMOUC a.s. , Hybešova 1282/16, 779 00 Olomouc
tel: +420 585 111 800, fax: +420 585 312 567
E-mail: sales@cerpadla.cz Web: www.cerpadla.cz, www.ishpumps.cz